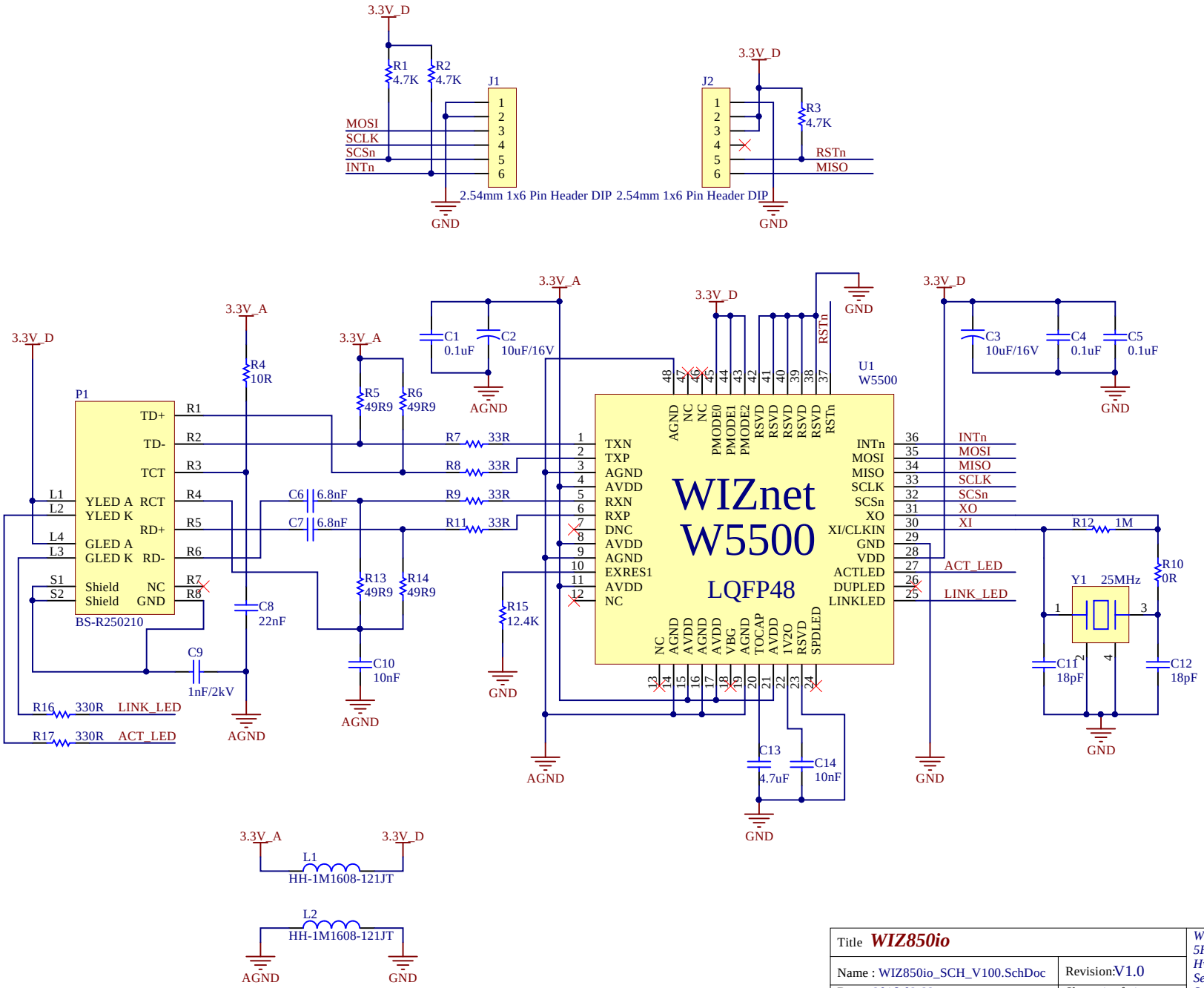

Title **WIZ850io**		WIZnet Co., Ltd. 5F, Humax Village Hwangseaul-ro, Bundang-gu Seongnam-si, Gyeongi-do South Korea	WIZnet IOP IoT
Name : WIZ850io_SCH_V100.SchDoc	Revision: V1.0		
Date: 2016-02-22	Sheet 1 of 1		
Team: Team Wiki	Drawn By: Scott		